A-A (1 : 1)

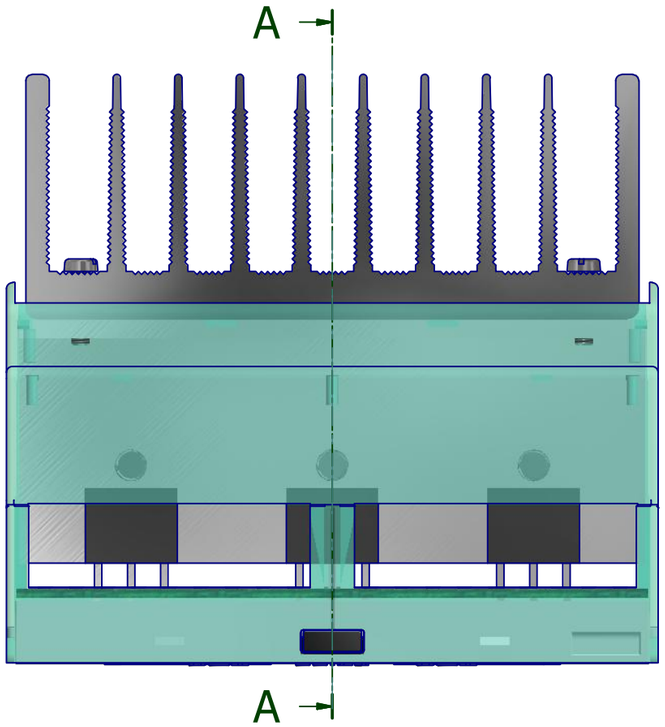

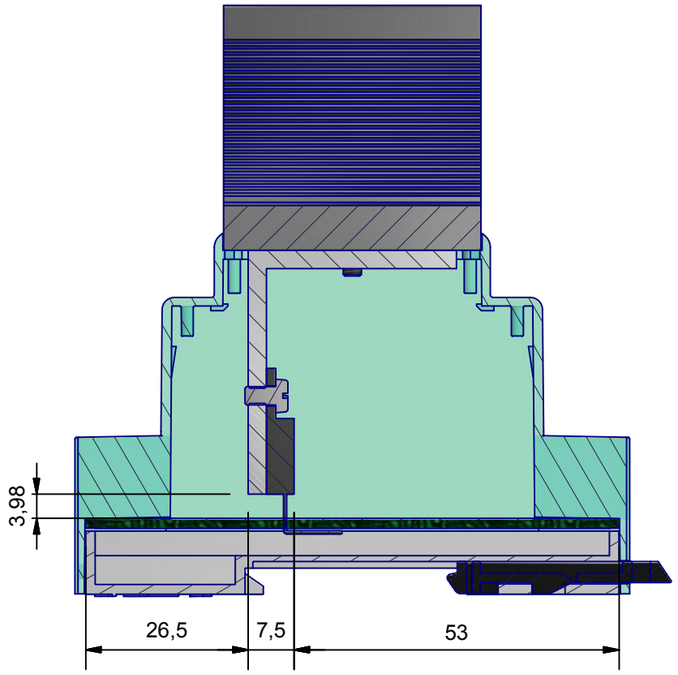

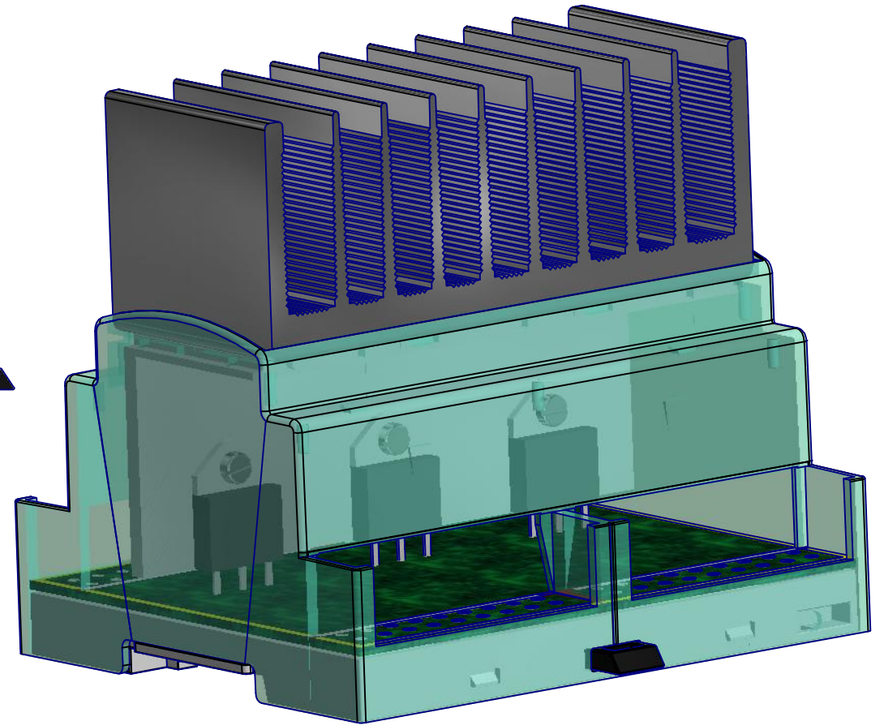

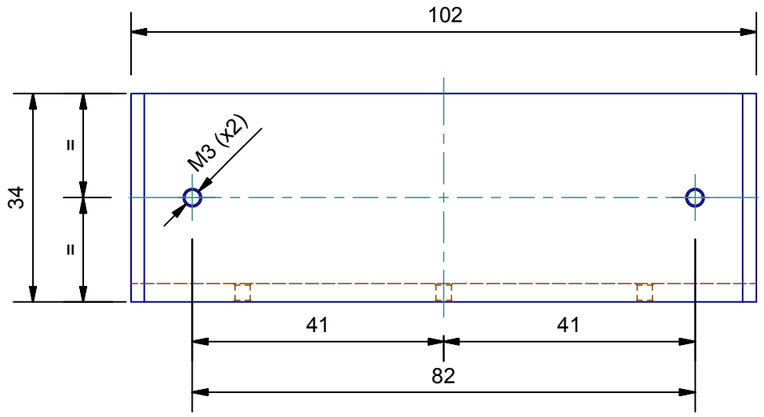

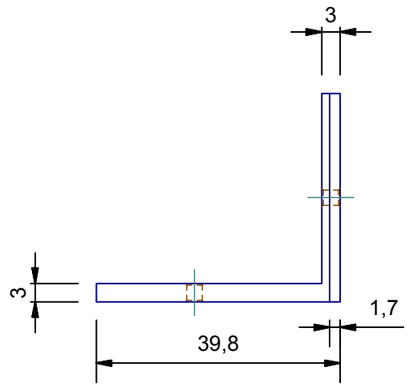

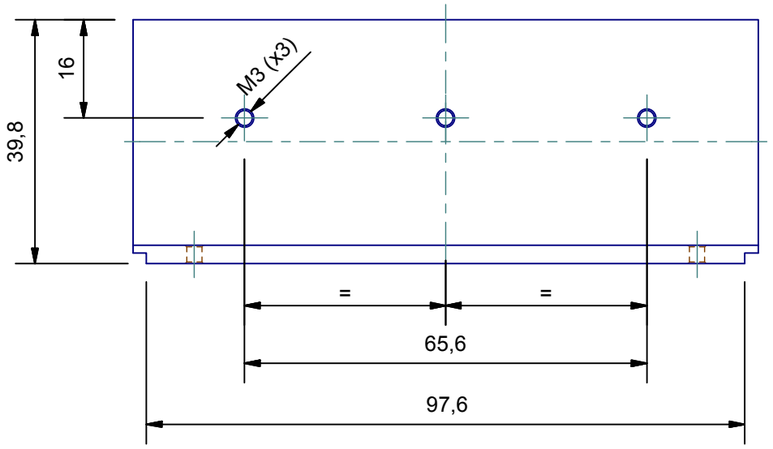

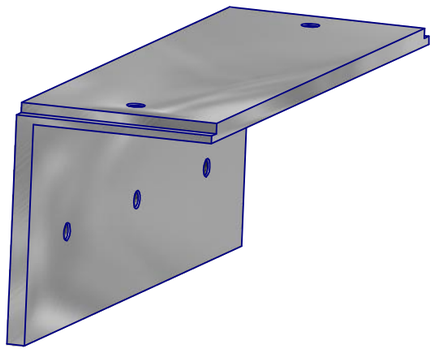

Da 0,5 a 3	Oltre 3 fino a 6	Oltre 6 fino a 30	Oltre 30 fino a 120	Oltre 120
± 0,1	± 0,1	± 0,2	± 0,3	± 0,5

RESERVED PROPERTY
The present drawing cannot be reproduced or comunicated to 3d parties, even partially, without the authorization of ITALTRONIC Srl. Italtronic reserves to protect its own rights according to the law.

Dimension in mm

SHEET NR. 1 / 1

DRAWING BY — Manual modification are not allowed

GENERAL TOLERANCE: UNI EN 22768/1 Media (m)

Date: 08/08/2012

Replace nr.

Drawed: Reginato M.

Checked: Dalla Montà D.

Scale:

5	4	3	2	1

Revision description

Denomination:

Accessorio per fissaggio verticale del dissipatore 6M

Accessory for vertical mounting of heatsink 6M

ITALTRONIC S.R.L.
VIA AUSTRIA 25/D 35127
PADOVA - ITALY
www.italtronic.com

Drawing nr. V-04035-00