Revisions			
Rev.	Description	Date	Mod. by
1	Aggiornato disegno	09/07/2024	M.S.

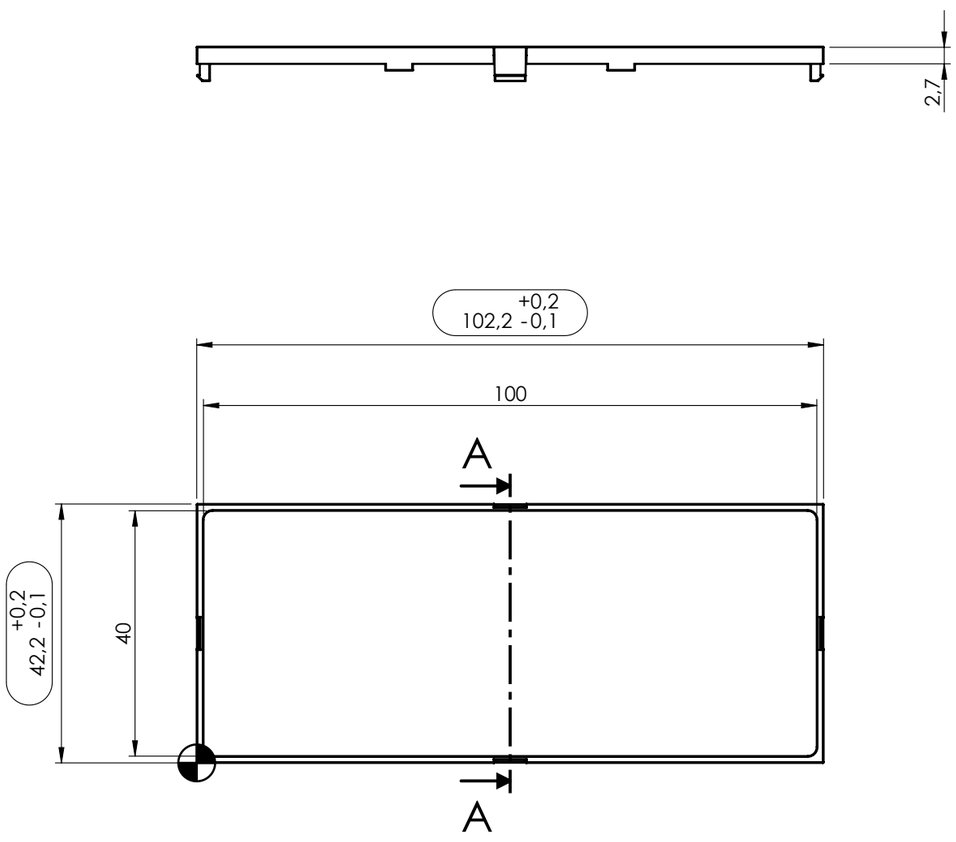

General information:
- Workpiece zero point for mechanical processing
- Minimum recommended radius for machining = R1.0 mm

General Tolerance UNI EN 22768/1 Media (m)					Sheet:
from 0.5 to 3	from 3 to 6	from 6 to 30	from 30 to 120	from 120 to 400	1
± 0.1	± 0.1	± 0.2	± 0.3	± 0.5	

Scale:	IM:	Drawed:	Checked:	Date:	Material:	Process:
1:1	--		R.N.	01/06/2023	PC/ABS-PC	INJECTION
Dimension in mm		The present drawing cannot be reproduced or comunicated to 3d parties, even partialy, without the authorization of ITALTRONIC Srl. Italtronic reserves to protect its own rights according to the law.	Replaces the: M-00209-01	Derived from: --	Weight: 11.39 gr	Cod. Mold: ST.0511400

italtronic
enclosures for electronics
italtronic.com

Description:
PANNELLO MODULBOX CON CORNICE 6M
PANEL MODULBOX WITH FRAME 6M

Drawing nr.: **2_250_03707**

Rev.: 01

A3