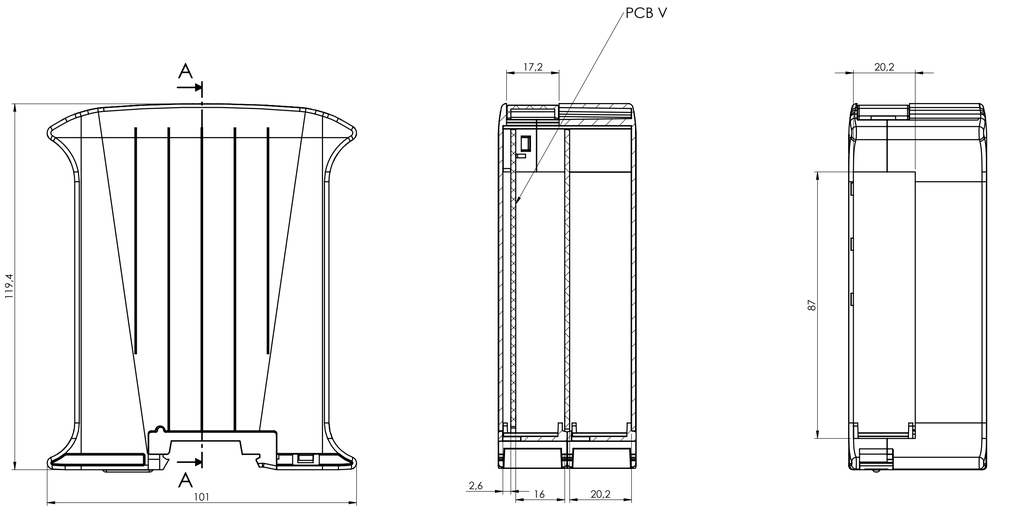
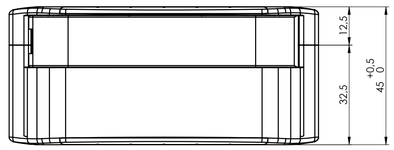
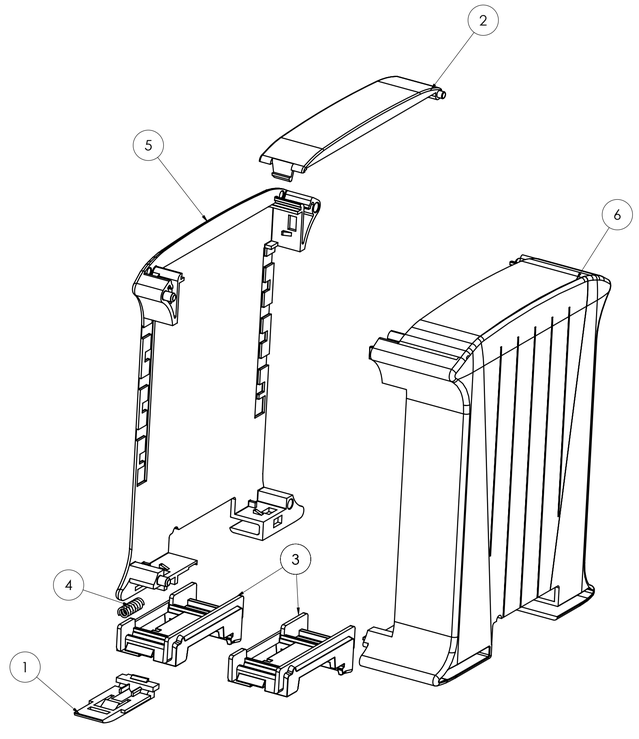
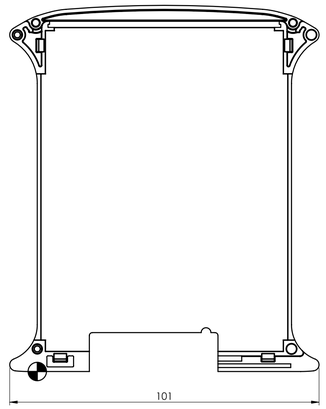


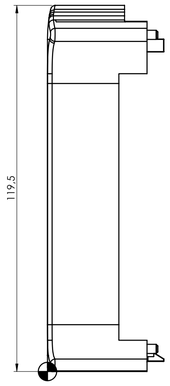
SECTION A-A

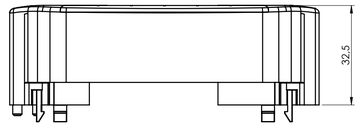




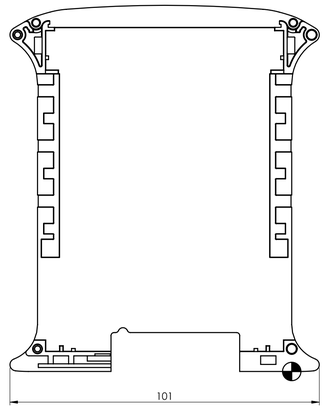
COVER RAILBOX

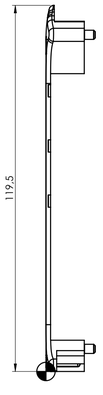






BASE RAILBOX

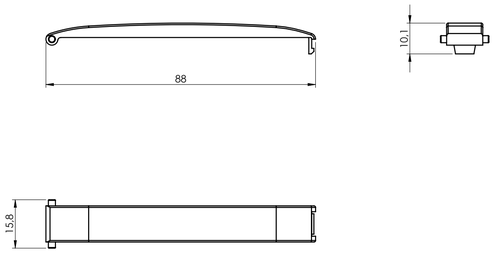






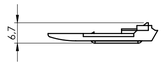
General information:
- Workpiece zero point for mechanical processing
- Minimum recommended radius for machining = R1.0 mm
- Mounting rail like EN 60715: TH 35-15
- Recommended PCB outline on www.italtronic.com

HINGED PANEL



HOOK





SPRING





RIF.	Q.TY	DRAWING	DESCRIPTION
1	1	2_110_00010	HOOK RAILBOX FOR CONNECTION BUS
2	1	2_110_00072	FRONT HINGED TRANSPARENT PANEL 17 MM
3	2	2_110_00015	ACCESSORY BUS 22,5 MM
4	1	2_110_00011	SPRING FOR HOOK RAILBOX
5	1	2_110_00012	BASE RAILBOX MULTILEVEL PLUG-IN AND FIX 12.5 MM BUS
6	1	2_110_00023	COVER RAILBOX PLUG-IN AND FIX 32.5 MM BUS

General Tolerance UNI EN 22768/1 Media (m)						Sheet:
from 0.5 to 3 ± 0.1	from 3 to 6 ± 0.1	from 6 to 30 ± 0.2	from 30 to 120 ± 0.3	from 120 to 400 ± 0.5		1
Scale: 1:1	IM: --	Drawed: M.S.	Checked: R.N.	Date: 24/01/2024	Material:	Process:
Dimension in mm	The present drawing cannot be reproduced or communicated to 3rd parties, even partially, without the written permission of Italtronic. Italtronic reserves its patent/IPR over rights according to the law.		Replaces the: R-03455-00	Derived from: --	Weight: gr	Cod. Mold: --

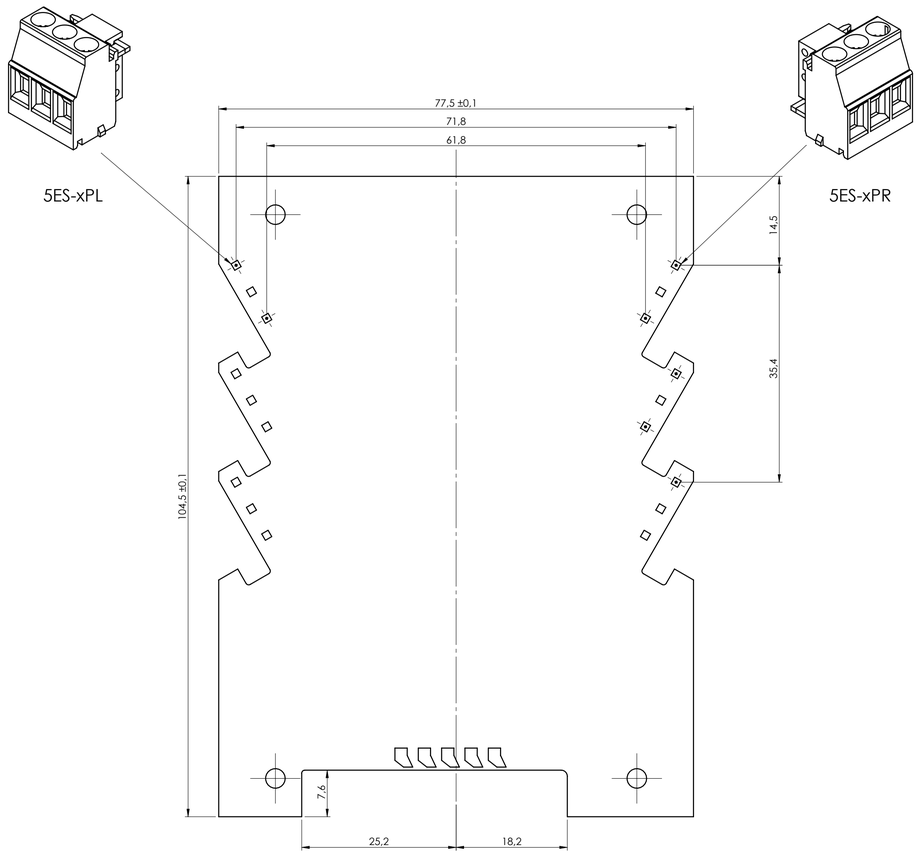
italtronic enclosures for electronics
italtronic.com

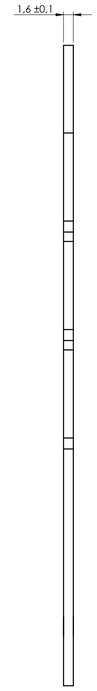
Description:
RAILBOX MULTILEVEL PLUG-IN E FIX 45 MM BUS
RAILBOX MULTILEVEL PLUG-IN AND FIX 45 MM BUS

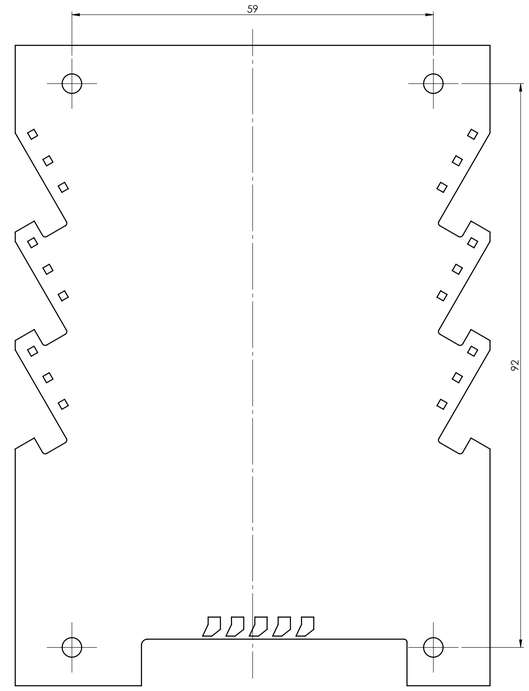
Drawing nr.: **3_110_00010**

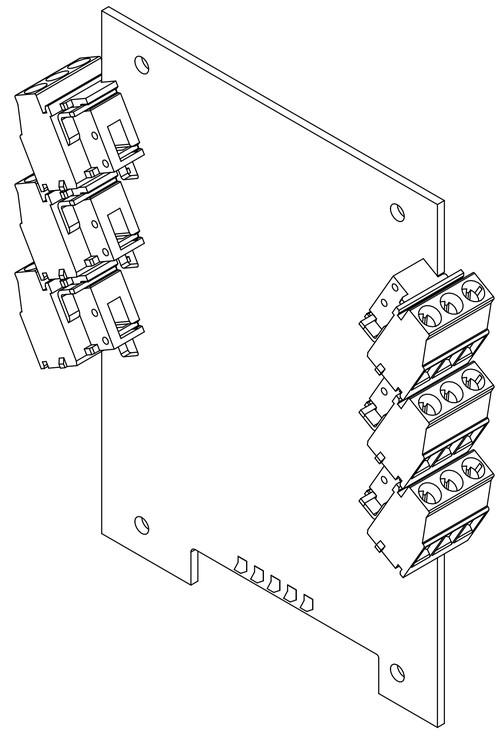
Rev.: 00 A1

PCB V FIX









General Tolerance UNI EN 22768/1 Media (m)						Sheet:
from 0,5 to 3 ± 0,1	from 3 to 6 ± 0,1	from 6 to 30 ± 0,2	from 30 to 120 ± 0,3	from 120 to 400 ± 0,5		PCB
Scale: 1:1	IM: --	Drawed: M.S.	Checked: R.N.	Date: 24/01/2024	Material:	Process:
Dimension in mm	The present drawing is owned by italtronic and cannot be reproduced or communicated to 3rd parties without the written authorization of ITALTRONIC SRL. Italtronic reserves to protect its own rights also relating to the law.	Replaces the: R-03455-00	Derived from: --	Weight: gr		Cod. Mold: --

Description:
RAILBOX MULTILEVEL PLUG-IN E FIX 45 MM BUS
RAILBOX MULTILEVEL PLUG-IN AND FIX 45 MM BUS

italtronic
enclosures for electronics
italtronic.com

Drawing nr.: **3_110_00010**

Rev.: 00 A1